RUSKIN®

3900 Dr. Greaves Rd. • Kansas City, MO 64030 • (816) 761-7476 • FAX (816) 765-8955

ACL845 STATIONARY ACOUSTICAL LOUVER

FORMED STEEL

STANDARD CONSTRUCTION

FRAME
8" (203) deep, 16 gage (1.6) galvanized steel channel.

BLADES
18 gage (1.3) galvanized steel exterior surface, with 22 gage (.9) perforated steel interior surface that covers insulation. Blades positioned at 45° angle and spaced approximately 8" (203) center to center.

ACOUSTICAL INSULATION
Ruskatherm blanket.

SCREEN
1/2" mesh x 19 gage (13 x 1.1) galvanized bird screen in removable frame. Screen adds approximately 1/2" (13) to louver depth.

FINISH
Mill.

MINIMUM SIZE
12"w x 18"h (305 x 457).

APPROXIMATE SHIPPING WEIGHT
9 lbs. per sq. ft.(43.9 kg/m²).

MAXIMUM FACTORY ASSEMBLY SIZE
Shall be 64 sq. ft. (6m²). Maximum single section size shall be 48"w x 96"h (1219 x 2438). Louvers larger than the maximum single section size will require field assembly of smaller sections.

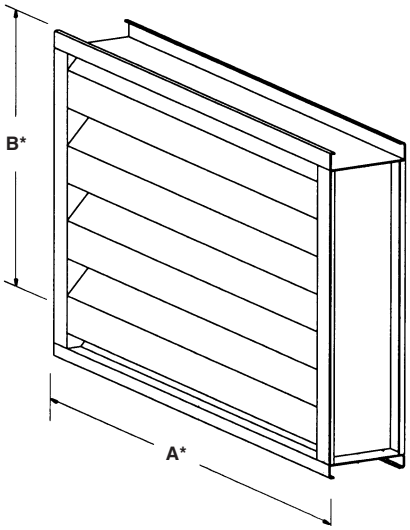

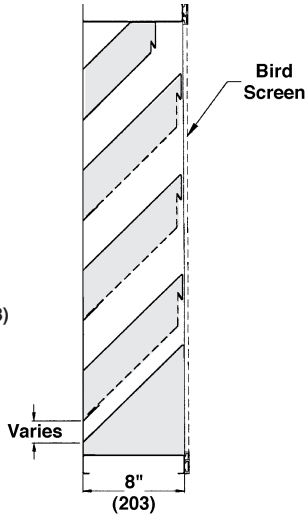

FRAME CONSTRUCTION

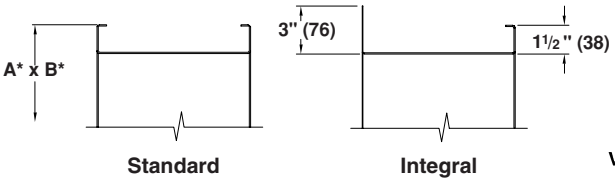

FEATURES

The ACL845 offers:
- Insulated blades which provide effective sound attenuation and weather protection.
- Published performance ratings based on testing in accordance with AMCA Publication 511.
- Architecturally pleasing appearance.

VARIATIONS

Variations to the basic design of this louver are available at additional cost. They include:
- Extended sill.
- Front or rear security bars.
- Filter racks.
- Installation angles.
- A variety of bird and insect screens.
- Selection of finishes: prime coat, baked enamel (modified fluoropolymer), epoxy, Pearledize, Kynar, clear and color anodize. (Anodize finish available only on aluminum construction. Some variation in anodize color consistency is possible.)
- Formed aluminum frame with .100" (2.5) nominal wall thickness and .080" (2) blade with .040" (1) perforated aluminum interior surface.

Octave Band Frequency (Hz)	Free Field Noise Reduction (db) Ruskatherm Blanket
2/125	13
3/250	12
4/500	15
5/1000	22
6/2000	21
7/4000	21
8/8000	23

To calculate Transmission Loss (db), subtract 6 db from Free Field Noise Reduction (db).

Dimensions in parenthesis ( ) indicate millimeters.

Units furnished 1/4" (6) smaller than given opening dimensions.

TAG	QTY.	SIZE		FRAME	VARIATIONS
		A*-WIDE	B*-HIGH		

PROJECT **LOCATION**
ARCH./ENGR. **CONTRACTOR**
REPRESENTATIVE **DATE**

ALL STATED SPECIFICATIONS ARE SUBJECT TO CHANGE WITHOUT NOTICE OR OBLIGATION.

©Ruskin Company January 1998

SUGGESTED SPECIFICATION

Furnish and install louvers as hereinafter specified where shown on plans or as described in schedules. Louvers shall be stationary accoustical type contained within a 8" (203) frame. Louver components (heads, jambs, sills, blades, and mullions) shall be factory assembled by the louver manufacturer. Louver sizes too large for shipping shall be built up by the contractor from factory assembled louver sections to provide overall sizes required. Louver design shall incorporate structural supports required to withstand a windload of 20 lbs. per sq. ft. (.96kPa) (equivalent of a 90 mph wind [145 KPH] - specifier may substitute any loading required).

Louvers shall be Ruskin Model ACL845 construction as follows:

Frame: 16 gage (1.6) galvanized steel channel.

Blades: 18 gage (1.3) galvanized steel exterior surface, 22 gage (.9) perforated steel interior surface that covers insulation. Blades are positionied at 45° angle and spaced approximately 8" (203) center to center.

Screen: 1/2" mesh x 19 gage (13 x 1.1) galvanized steel in removable frame.

Finish: Select finish specification from Ruskin/Valspar Finishes Brochure.

Published louver performance data bearing the AMCA Certified Ratings Seal for Air Performance and Water Penetration must be submitted for approval prior to fabrication and must demonstrate pressure drop equal to or less than the Ruskin model specified.

PERFORMANCE DATA

AMCA Standard 500 provides a reasonable basis for testing and rating louvers. Testing to AMCA 500 is performed under a certain set of laboratory conditions. This does not guarantee that other conditions will not occur in the actual environment where louvers must operate.

The louver system should be designed with a reasonable safety factor for louver performance. To ensure protection from water carryover, design with a performance level somewhat below maximum desired pressure drop and .01 oz./sq. ft. of water penetration.

WATER PENETRATION

Test size 48" wide x 48" high (1219 x 1219)

Beginning point of water penetration at .01 oz./sq. ft. is 838 fpm (255 m/min).

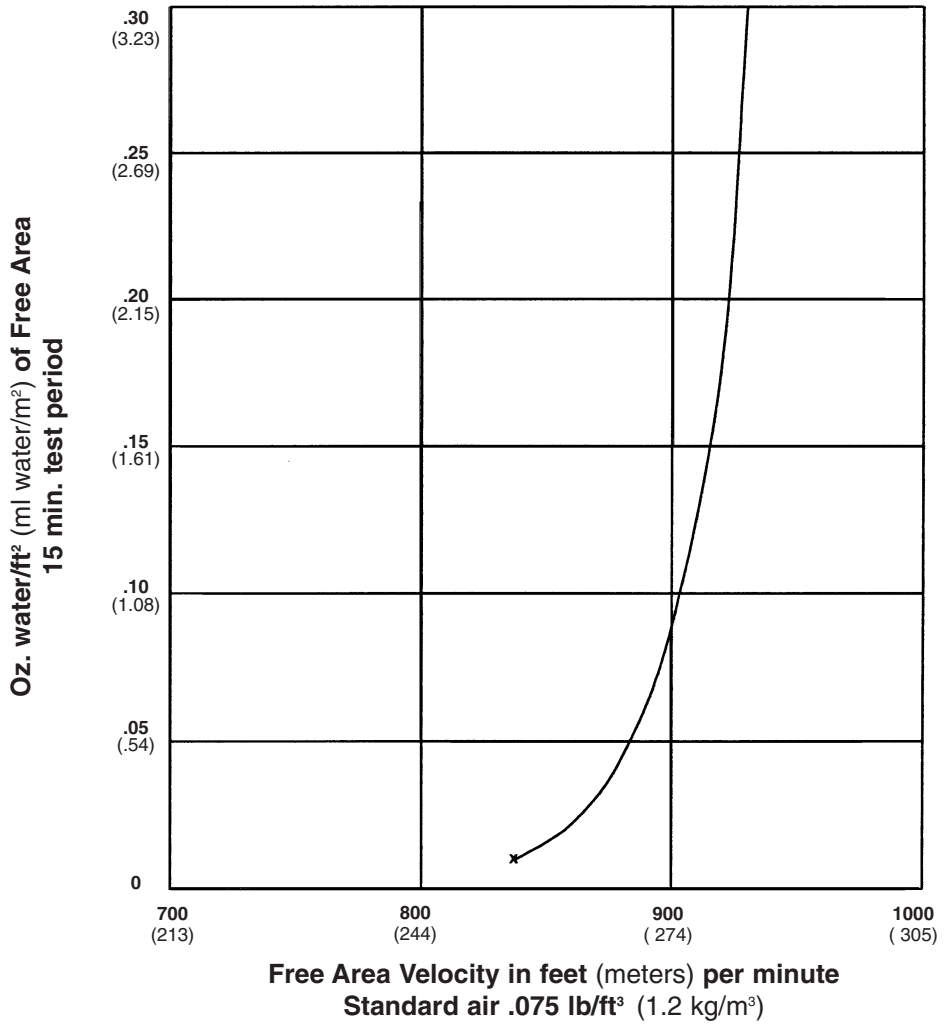

Ruskin Manufacturing Company certifies that the louver shown herein is licensed to bear the AMCA Seal. The ratings shown are based on tests and procedures performed in accordance with AMCA Standard 511 and comply with the requirements of the AMCA Certified Ratings Program. AMCA Certified Ratings Seal applies to air performance ratings and water penetration ratings only.

FREE AREA GUIDE

Free Area Guide shows free area in ft² and m² **for various sizes of ACL845**
Width – Inches and Meters

Height – Inches and Meters

	12 0.30	18 0.46	24 0.61	30 0.76	36 0.91	42 1.07	48 1.22	54 1.37	60 1.52	66 1.68	72 1.83	78 1.98	84 2.13	90 2.29	96 2.44
18 0.46	**0.24** 0.01	**0.40** 0.01	**0.56** 0.01	**0.72** 0.02	**0.88** 0.02	**1.04** 0.03	**1.20** 0.03	**1.36** 0.03	**1.52** 0.04	**1.68** 0.04	**1.84** 0.05	**2.00** 0.05	**2.16** 0.05	**2.32** 0.06	**2.48** 0.06
24 0.61	**0.34** 0.01	**0.57** 0.01	**0.80** 0.02	**1.03** 0.03	**1.26** 0.03	**1.49** 0.04	**1.72** 0.04	**1.95** 0.05	**2.18** 0.06	**2.41** 0.06	**2.64** 0.07	**2.87** 0.07	**3.10** 0.08	**3.33** 0.08	**3.56** 0.09
30 0.76	**0.45** 0.01	**0.75** 0.02	**1.05** 0.03	**1.35** 0.03	**1.65** 0.04	**1.95** 0.05	**2.25** 0.06	**2.55** 0.06	**2.85** 0.07	**3.14** 0.08	**3.44** 0.09	**3.74** 0.10	**4.04** 0.10	**4.34** 0.11	**4.64** 0.12
36 0.91	**0.55** 0.01	**0.92** 0.02	**1.29** 0.03	**1.66** 0.04	**2.03** 0.05	**2.40** 0.06	**2.77** 0.07	**3.14** 0.08	**3.51** 0.09	**3.88** 0.10	**4.24** 0.11	**4.61** 0.12	**4.98** 0.13	**5.35** 0.14	**5.72** 0.15
42 1.07	**0.76** 0.02	**1.26** 0.03	**1.76** 0.04	**2.27** 0.06	**2.77** 0.07	**3.28** 0.08	**3.78** 0.10	**4.28** 0.11	**4.79** 0.12	**5.29** 0.13	**5.80** 0.15	**6.30** 0.16	**6.80** 0.17	**7.31** 0.19	**7.81** 0.20
48 1.22	**0.86** 0.02	**1.43** 0.04	**2.01** 0.05	**2.58** 0.07	**3.16** 0.08	**3.73** 0.09	**4.30** 0.11	**4.88** 0.12	**5.45** 0.14	**6.02** 0.15	**6.60** 0.17	**7.17** 0.18	**7.74** 0.20	**8.32** 0.21	**8.89** 0.23
54 1.37	**0.96** 0.02	**1.61** 0.04	**2.25** 0.06	**2.89** 0.07	**3.54** 0.09	**4.18** 0.11	**4.82** 0.12	**5.47** 0.14	**6.11** 0.16	**6.75** 0.17	**7.40** 0.19	**8.04** 0.20	**8.68** 0.22	**9.33** 0.24	**9.97** 0.25
60 1.52	**1.07** 0.03	**1.78** 0.05	**2.49** 0.06	**3.21** 0.08	**3.92** 0.10	**4.63** 0.12	**5.35** 0.14	**6.06** 0.15	**6.77** 0.17	**7.48** 0.19	**8.20** 0.21	**8.91** 0.23	**9.62** 0.24	**10.34** 0.26	**11.05** 0.28
66 1.68	**1.27** 0.03	**2.12** 0.05	**2.97** 0.08	**3.82** 0.10	**4.66** 0.12	**5.51** 0.14	**6.36** 0.16	**7.21** 0.18	**8.05** 0.20	**8.90** 0.23	**9.75** 0.25	**10.60** 0.27	**11.45** 0.29	**12.29** 0.31	**13.14** 0.33
72 1.83	**1.38** 0.03	**2.29** 0.06	**3.21** 0.08	**4.13** 0.10	**5.05** 0.13	**5.96** 0.15	**6.88** 0.17	**7.80** 0.20	**8.72** 0.22	**9.63** 0.24	**10.55** 0.27	**11.47** 0.29	**12.38** 0.31	**13.30** 0.34	**14.22** 0.36
78 1.98	**1.48** 0.04	**2.47** 0.06	**3.45** 0.09	**4.44** 0.11	**5.43** 0.14	**6.42** 0.16	**7.40** 0.19	**8.39** 0.21	**9.38** 0.24	**10.36** 0.26	**11.35** 0.29	**12.34** 0.31	**13.32** 0.34	**14.31** 0.36	**15.30** 0.39
84 2.13	**1.58** 0.04	**2.64** 0.07	**3.70** 0.09	**4.75** 0.12	**5.81** 0.15	**6.87** 0.17	**7.92** 0.20	**8.98** 0.23	**10.04** 0.25	**11.09** 0.28	**12.15** 0.31	**13.21** 0.34	**14.26** 0.36	**15.32** 0.39	**16.38** 0.42
90 2.29	**1.79** 0.05	**2.98** 0.08	**4.17** 0.11	**5.36** 0.14	**6.55** 0.17	**7.75** 0.20	**8.94** 0.23	**10.13** 0.26	**11.32** 0.29	**12.51** 0.32	**13.70** 0.35	**14.89** 0.38	**16.09** 0.41	**17.28** 0.44	**18.47** 0.47
96 2.44	**1.89** 0.05	**3.15** 0.08	**4.41** 0.11	**5.68** 0.14	**6.94** 0.18	**8.20** 0.21	**9.46** 0.24	**10.72** 0.27	**11.98** 0.30	**13.24** 0.34	**14.50** 0.37	**15.76** 0.40	**17.03** 0.43	**18.29** 0.46	**19.55** 0.50

Ruskin Sound Control certifies that the louver shown herein is licensed to bear the AMCA Seal. The ratings shown are based on tests and procedures performed in accordance with AMCA Standard 511 and comply with the requirements of the AMCA Certified Ratings Program. AMCA Certified Ratings Seal applies to air performance ratings and water penetration ratings only.

PRESSURE DROP

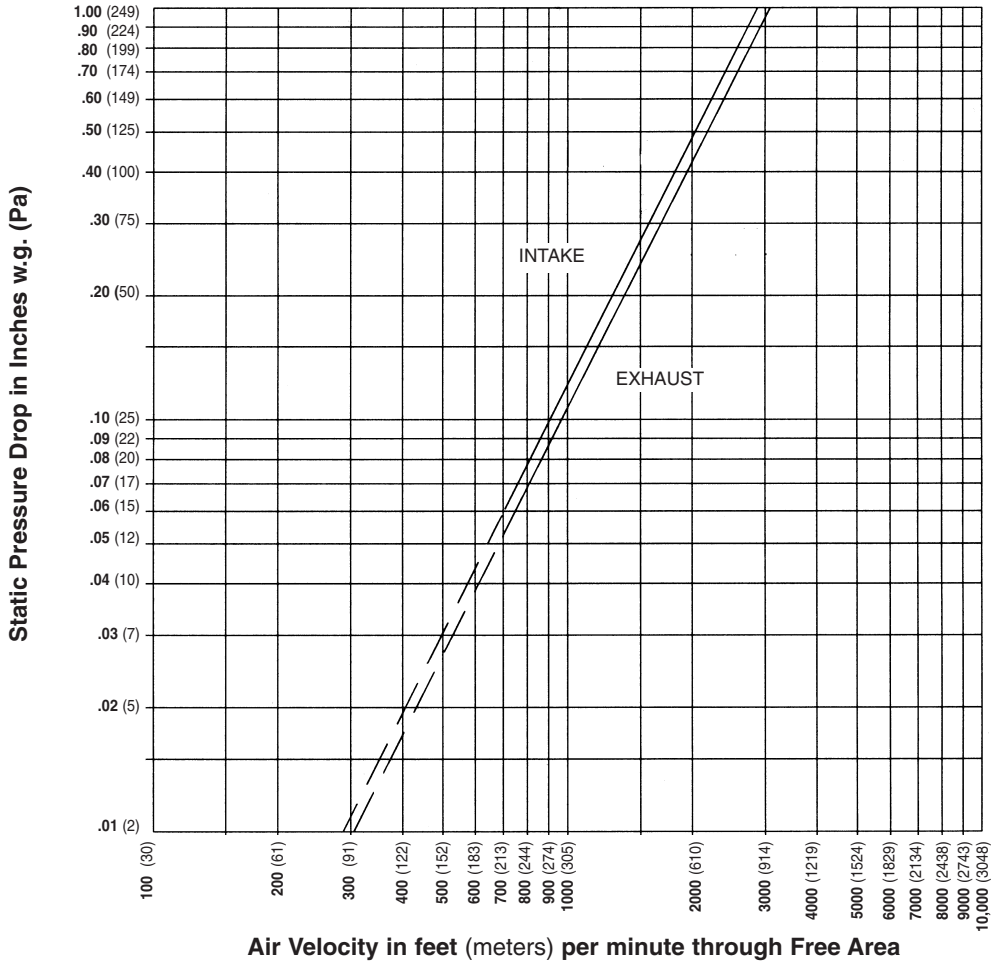

Ratings do not include the effect of a bird screen.

TYPICAL INSTALLATION DETAILS

Masonry Wall

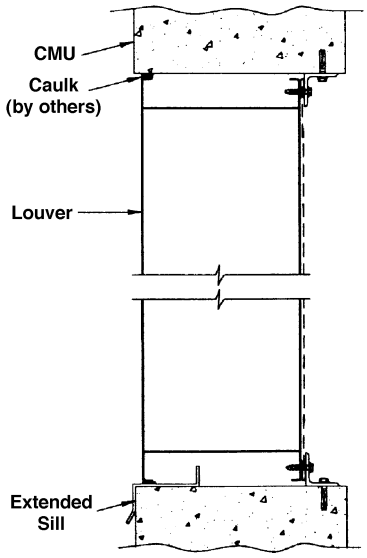

Metal Panel Wall

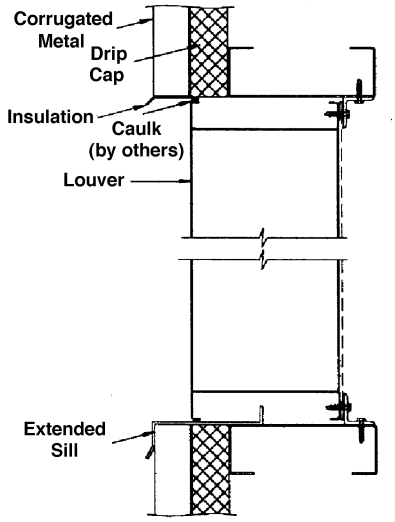

Wood Installation

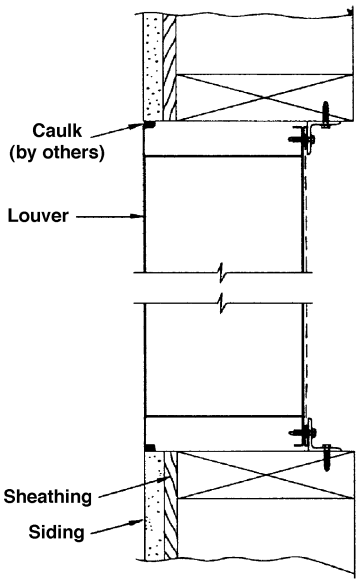

Flange Mount

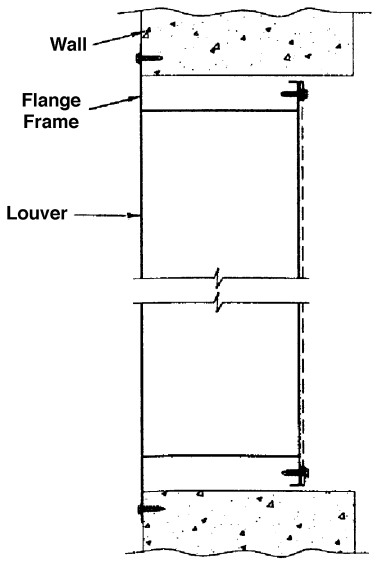

Accessories at additional cost.

RUSKIN®

3900 Dr. Greaves Rd.
Kansas City, MO 64030
(816) 761-7476
FAX (816) 765-8955
www.ruskin.com