RUSKIN®

3900 Dr. Greaves Rd. • Kansas City, MO 64030 • (816) 761-7476 • FAX (816) 765-8955 • www.ruskin.com

BD2/A1 AND BD2/A2 BACKDRAFT DAMPERS

STANDARD CONSTRUCTION

FRAME
6063T5 extruded aluminum, .090" (2.3) wall thickness, mitered corners.

BLADES
BD2/A1 – .025 (.6) formed aluminum, extruded vinyl edge seals.
BD2/A2 – 6063T5 extruded aluminum, .050" (1.2) wall thickness, extruded vinyl edge seals.

BEARINGS
Synthetic.

LINKAGE
Concealed in frame.

FINISH
Mill.

TEMPERATURE LIMITS
-40°F to +200°F (-40°C to +93°C).

MAXIMUM SPOT VELOCITY
BD2/A1 – 1500 fpm.
BD2/A2 – 2500 fpm.

MINIMUM SIZE
6"w x 6"h (152 x 152).

MAXIMUM SIZE
Single section – 40"w x 48"h (1016 x 1219).

Note:
When used in fan discharge applications, damper should be located at a minimum distance equal to half the fan diameter away from the fan discharge.

Dimensions in parentheses ( ) indicate millimeters.

FEATURES

The BD2 dampers offer backdraft protection in light to medium duty applications that demand less than 12 cfm per square foot of leakage at 1/2" w.g. Non-metallic blade-to-blade seal provides quiet operation during the highest spot velocities.

The damper's good looking appearance is maintained by sturdy, corrosion resistant aluminum construction. Contemporary styling features blades that overlap the frame for optimum resistance to weather.

VARIATIONS

The following variations to the BD2s are available at additional cost:

- Rear mounted screen
- Special finishes
- Electric actuators

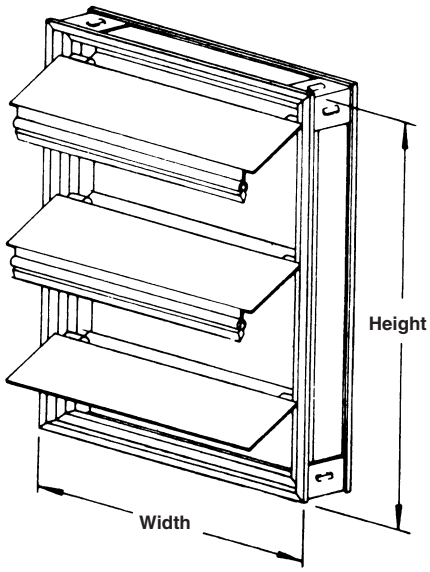

HORIZONTAL MOUNT
(Upward air flow only)

BD2/A1 FRAME CONSTRUCTION

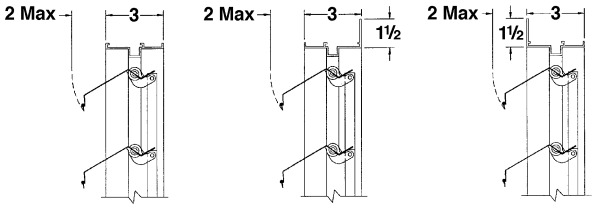

CHANNEL REAR FLANGE FRONT FLANGE

BD2/A2 FRAME CONSTRUCTION

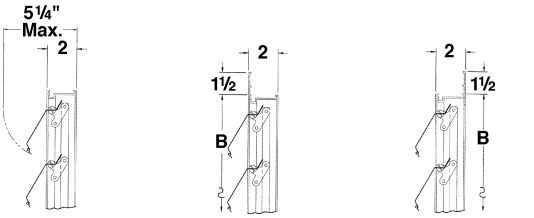

CHANNEL FRONT LANGE REAR FLANGE

*Unit is furnished approximately 1/4" (6) smaller than given opening dimensions.

ALL STATED SPECIFICATIONS ARE SUBJECT TO CHANGE WITHOUT NOTICE OR OBLIGATION.

© Ruskin 2007

SUGGESTED SPECIFICATION

Furnish and install at locations on plans or in accordance with schedules backdraft dampers that meet the following minimum construction standards: Frame shall be .090" (2.3) 6063T5 extruded aluminum wall thickness with mitered corners. Blades shall be (specify) .025" (.6) formed aluminum with extruded vinyl edge seals or .050" (1.3) 6063T5 extruded aluminum with extruded vinyl edge seals. Blade edge seals shall be mechanically locked into blade edge; adhesive type seals are unacceptable. Bearings shall be corrosion resistant synthetic and linkage shall be concealed in frame for low pressure drop and noise. Damper shall be, in all respects, equivalent to Ruskin model (specify) BD2/A1 or BD2/A2.

PERFORMANCE DATA

AMCA Standard 500 provides a reasonable basis for testing and rating dampers. Testing to AMCA 500 is performed under a certain set of laboratory conditions. This does not guarantee that other conditions will not occur in the actual environment where dampers must operate.

Designs should provide a reasonable safety factor for damper performance by selecting at some point below damper leakage or pressure drop system requirements.

BD2A1

DAMPER WIDTH	MAXIMUM BACK PRESSURE (EXTERNAL WIND VELOCITY)	MAXIMUM SYSTEM VELOCITY	LEAKAGE*	
			% OF MAX. FLOW	CFM/ SQ. FT.
40" (1016)	55 mph/1.5" w.g.	1000 fpm	1.5	15.0
36" (914)	70 mph/2.5" w.g.	1000 fpm	1.5	15.0
24" (610)	85 mph/3.5" w.g.	1000 fpm	2.0	20.0
12" (305)	95 mph/4.5" w.g.	1000 fpm	4.0	40.0

BD2A2

DAMPER WIDTH	MAXIMUM BACK PRESSURE (EXTERNAL WIND VELOCITY)	MAXIMUM SYSTEM VELOCITY	LEAKAGE*	
			% OF MAX. FLOW	CFM/ SQ. FT.
40" (1016)	75 mph/3" w.g.	1500 fpm	1.0	15.0
36" (914)	90 mph/4" w.g.	1500 fpm	1.0	15.0
24" (610)	100 mph/5" w.g.	1500 fpm	1.17	17.5
12" (305)	100 mph/6" w.g.	1500 fpm	2.67	40.0

***Leakage information based on pressure differential of 1" w.g.**

OPERATIONAL PRESSURES INCHES W.G.		
DAMPER MODEL	BLADES START TO OPEN	BLADES FULLY OPEN
BD2A1	.03	.10
BD2A2	.10	.15

INSTALLATION INSTRUCTIONS

1. When used in fan discharge applications, damper should be located at least one-half the fan diameter away from the fan.
2. For proper operation, damper must be installed square and free from racking.
3. Bracing of multiple section assemblies: The BD2/A1, BD2/A2 is intended to be self supporting only in the largest single section size. Multiple section damper assemblies may require bracing to support the weight of the assembly and to hold against system pressure. Ruskin recommends appropriate bracing to support the weight of the assembly and to hold against system pressure. Ruskin recommends appropriate bracing to support the damper horizontally at least once for every 8 feet of damper width. Vertical assemblies and higher system pressures may require more bracing.

RUSKIN®

3900 Dr. Greaves Rd.
Kansas City, MO 64030
(816) 761-7476
FAX (816) 765-8955
www.ruskin.com