RUSKIN®

3900 Dr. Greaves Rd. • Kansas City, MO 64030 • (816) 761-7476 • FAX (816) 765-8955

CAVITY SHAFT WALL METAL STUD FRAMING

INSTALLATION INSTRUCTIONS SUPPLEMENT

APPLICATION

These installations are for all fire and combination fire and smoke damper installations in cavity shaft wall partitions and apply to the following wall design numbers as detailed in the UL fire Resistance directory: U415, U437, U438, U467, U469 and U497.

GENERAL INSTALLATION NOTES

1. Refer to the installation instructions for the specific damper model for installation details.
2. Gypsum panels must be screwed 12" (305) O.C. maximum to all stud and runner flanges surrounding opening (see framing details).
3. See the appropriate damper installation for the Opening Size, Fasteners, Fastener Spacing and Mounting Angles.

FRAMING DETAILS

Note: Shaft wall construction may utilize C, E, H, I, J. C-H or C-T stud wall construction.

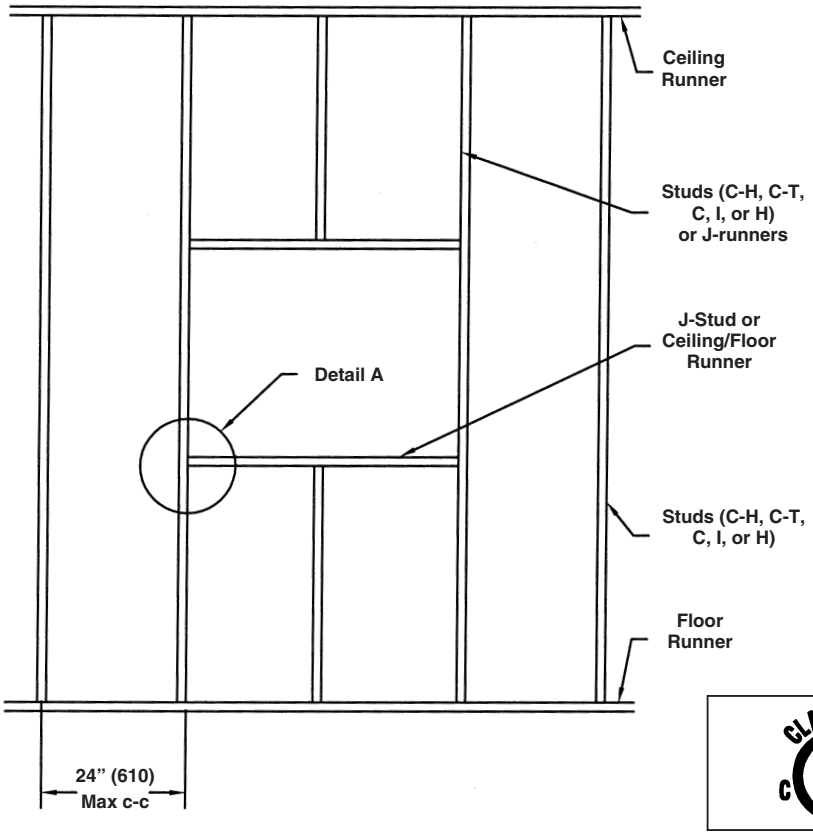

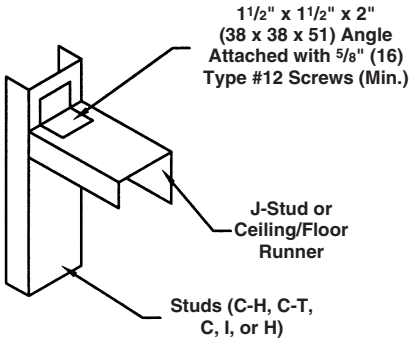

DETAIL A

CLASSIFIED C UL US

SEE COMPLETE MARKING ON PRODUCT

ALL STATED SPECIFICATIONS ARE SUBJECT TO CHANGE WITHOUT NOTICE OR OBLIGATION.

© Ruskin 2008

FRAMING DETAILS

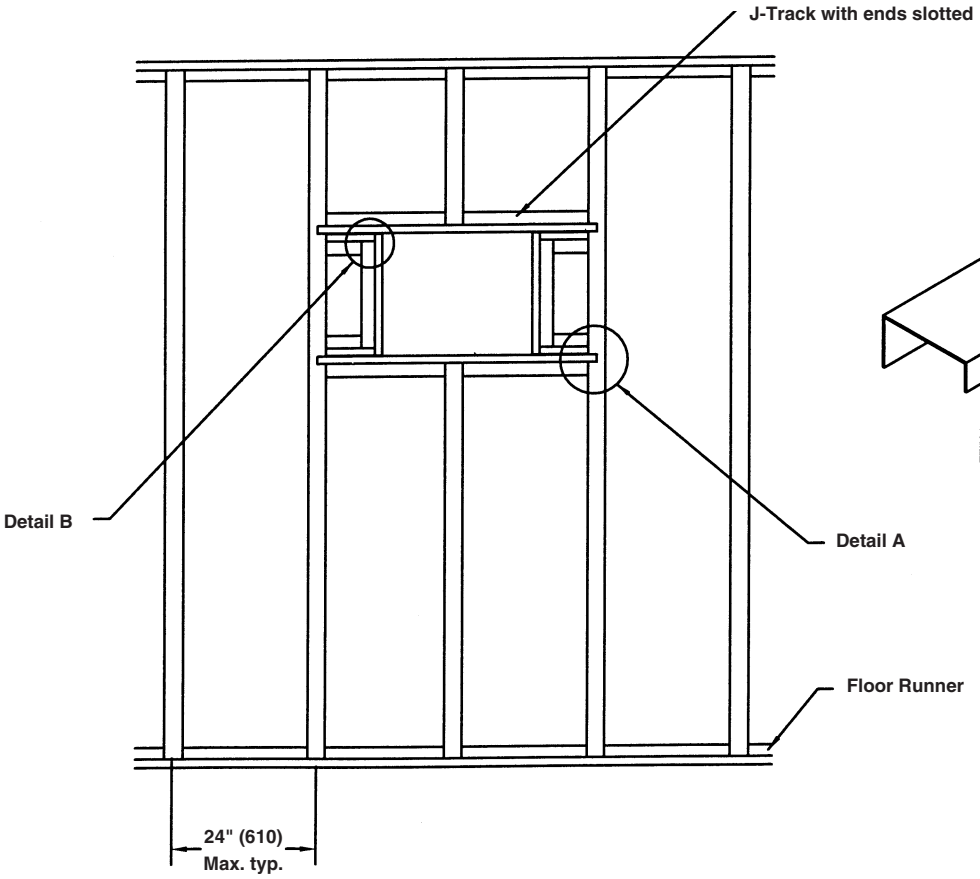

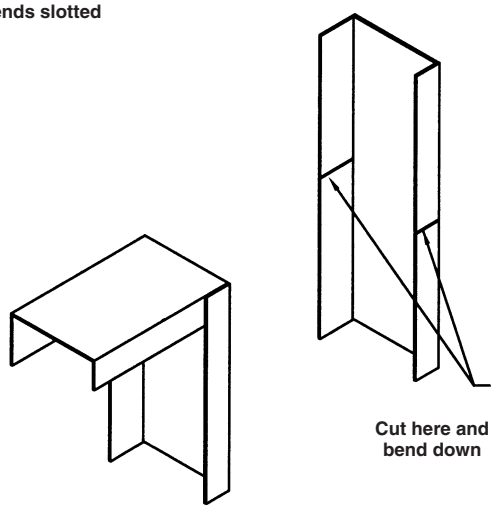

DETAIL B

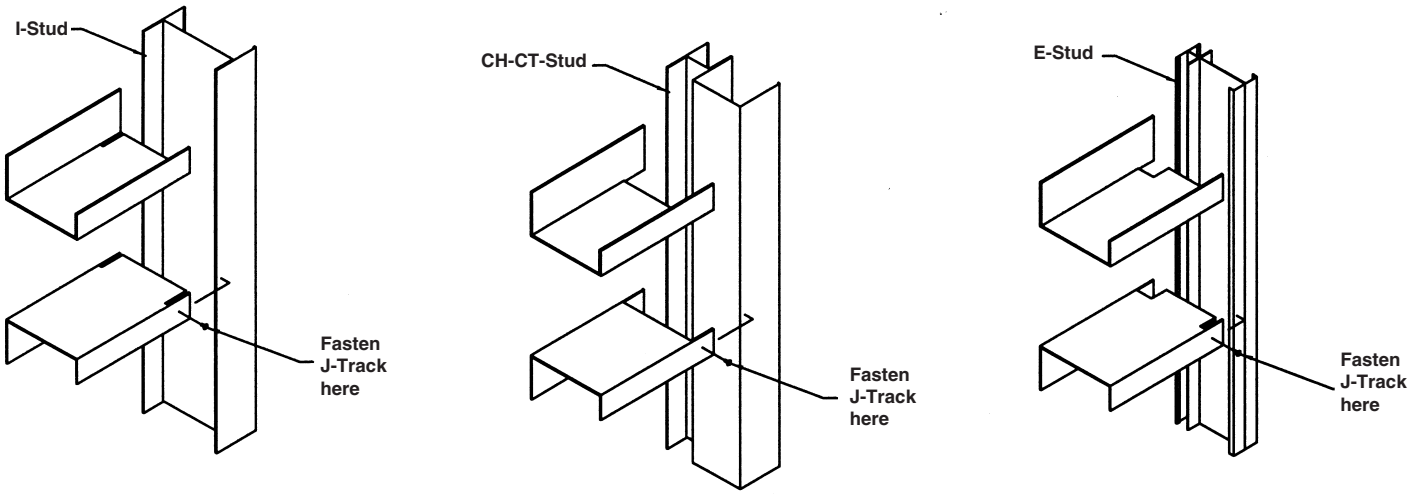

I-Stud CH-CT-Stud E-Stud

DETAIL A

RUSKIN®
3900 Dr. Greaves Rd.
Kansas City, MO 64030
(816) 761-7476
FAX (816) 765-8955
www.ruskin.com