DFD35

Galvanized Steel Multiple Blade "Dynamic" Fire Damper

1 1/2 Hour Rating UL555 Rated | For use in "Dynamic" or "Static" Systems

RUSKIN
AUTHORITY IN AIR CONTROL

APPLICATION

Ruskin Model DFD35 is a 1 1/2 hour UL classified, dynamic (fans on) or static (fans off), multiple blade style fire damper for use in HVAC systems that remain in operation during a fire. Fire dampers are used for the protection of openings in walls, partitions, or masonry floors with fire resistance ratings of less than 3 hours and shall have a 1 1/2 hour fire protection rating. The DFD35 can be installed vertically in walls or horizontally in masonry floors and is rated for airflow in either direction.

STANDARD CONSTRUCTION

Frame	5" x 16 gauge (127 x 1.6) galvanized, single piece, hat-shaped channel, structurally superior to 13 (2.4) gauge channel frame.
Blades	16 gauge (1.52) galvanized steel triple vee-groove, approximately 6" (152) on center.
Bearings	Stainless steel sleeve, pressed into frame.
Linkage	Concealed in frame.
Axles	1/2" (13) plated steel hex.
Fusible Link	165°F (74°C) standard. 212°F (100°C) available.
Damper Weight	Approximately 8 lbs. per sq. ft. without damper sleeve.

DAMPER SIZES

Minimum Size	Vertical or Horizontal Installation - 8"w x 6"h (203 x 152).
Maximum Size	**Single Section** Vertical or Horizontal Installation - 36"w x 48"h (914 x 1219). **Multiple Section** Vertical or Horizontal Installation – 120"w x 48"h (3048 x 1219) or 72"w x 96"h (1829 x 2438).

OPTIONS

SP100 Switch Package to remotely indicate damper blade position.

FAST Angle for one side angle installations.

PFMA Angles for two side angle installations.

Sleeve of various lengths and gauges to ensure field compliance with UL installation requirements.

Jamb Seals stainless steel flexible metal compression type.

Blade Seals silicone blade edge seal.

Crank Lever to assist with testing and fuse link replacement.

GA, Grille Access for one side installation and "out of wall" applications.

OW, Out of Wall of application where the damper cannot be installed within the plane of the wall or floor.

amca WORLDWIDE CERTIFIED RATINGS AIR PERFORMANCE AIR MOVEMENT AND CONTROL ASSOCIATION INTERNATIONAL, INC. www.amca.org

U.S. GREEN BUILDING COUNCIL MEMBER

ISO9001 CERTIFIED

5 YEAR LIMITED WARRANTY

The DFD35 dampers meet the requirements for fire dampers established by:

- **National Fire Protection Association**
  NFPA Standards 90A, 92A, 92B, and 101
- **ICC International Building Codes**
- **CSFM California State Fire Marshal Listing**
  #3225-245:005

CLASSIFIED c UL us

SEE COMPLETE MARKING ON PRODUCT

UL555 Classification
R5531

Canadian Standard
CAN/ULC-S112

NOTES:
- Dimensions in inches, parentheses ( ) indicate millimeters.
- Damper assembly furnished actual size.

AMCA LICENSED LEAKAGE AND AIR PERFORMANCE DATA

To determine the AMCA Licensed air performance:

Locate the applicable feet per minute face velocity on the bottom of the velocity vs. pressure drop chart below. Move up the chart to the most appropriate size damper line. From the intersection point, move left to determine the pressure drop on the left side of the chart.

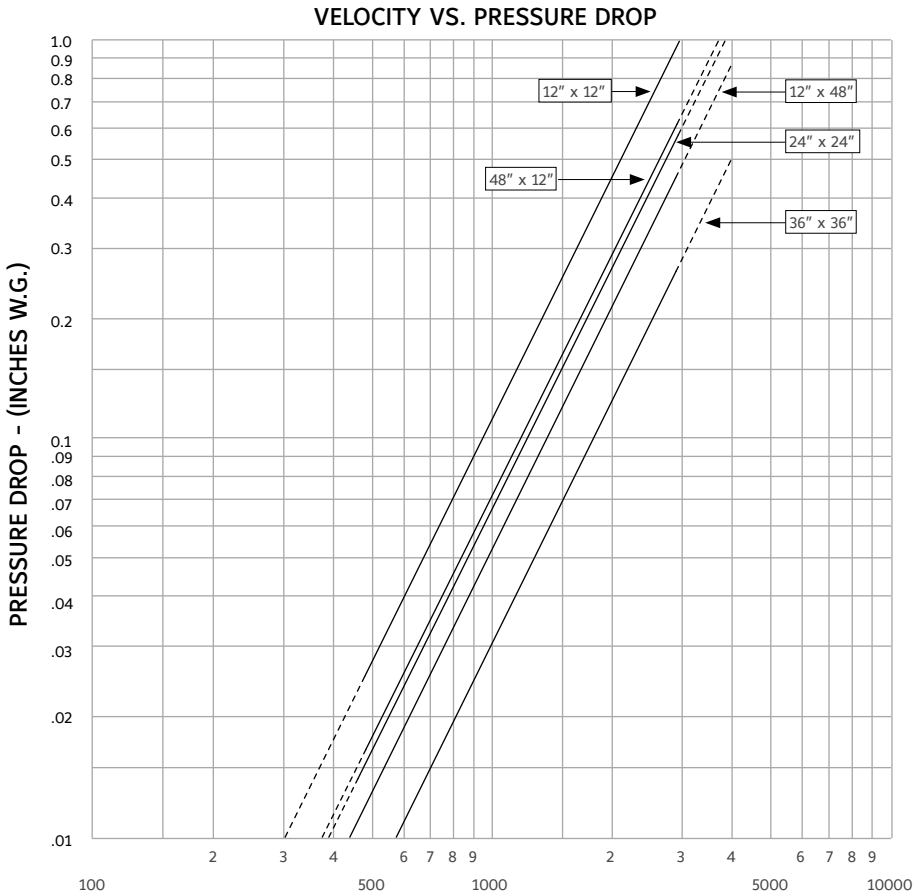

AMCA Fig. 5.3

Ruskin Company certifies that the DFD35 shown hereon are licensed to bear the AMCA Seal. The ratings shown are based on tests and procedures performed in accordance with AMCA Publication 511 and comply with the requirements of the AMCA Certified Ratings Program. The AMCA Certified Ratings Seal applies to air performance for the DFD35.

DAMPER DIMENSIONAL DATA

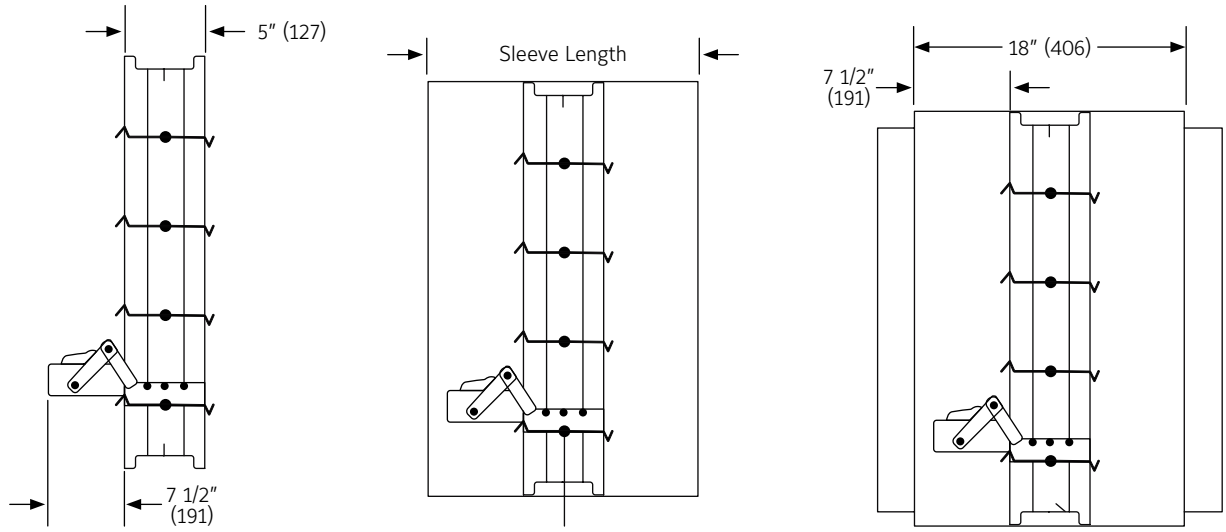

SLEEVE DIMENSIONS

DAMPER DIMENSIONAL DATA

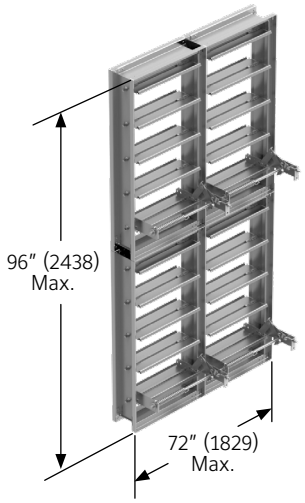

DFD35 MULTIPLE SECTION

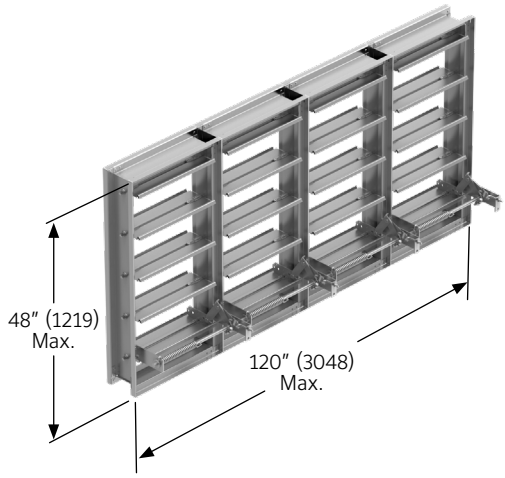

DFD35 MULTIPLE SECTION

FUSE LINK ADJUSTMENT

To Test or Replace the Fuse Link

- Loosen the nuts on the J-bolt (Do not remove the nuts all together).
- Remove the truarc ring.
- Turn the jackshaft to open the damper and remove the fuse link.
- Cycle the damper full open to full close positions, making sure the damper operates freely.

  The damper should be able to spring closed in any position.
- Replace the fuse link and adjust the damper into the original position.

Note: The damper can be adjusted in any position for volume control operation.

Item	Description
1	Multiple Blade Fire Damper
2	Fusible Link Issue ‘E’
3	Fuse Link Linkage
4	J-Bolt
5	Truarc Ring 1/4″ (6)
6	Over Center Linkage
7	Jackshaft Assembly

CAUTION: Damper assembly is under spring tension. Care should be taken to avoid bodily injury or damage to the damper assembly.

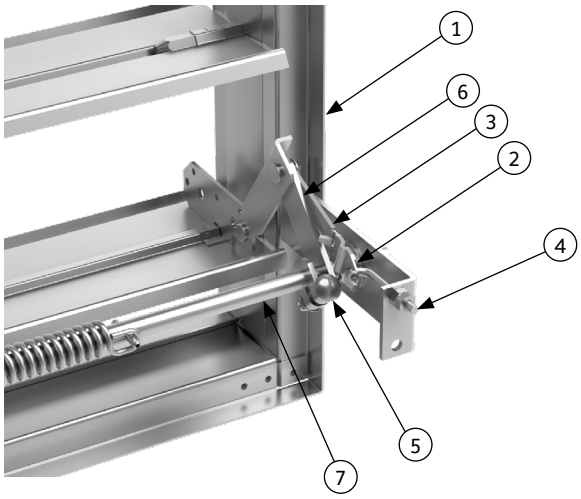

SLEEVE TRANSITION DIMENSIONAL INFORMATION

DUCT TRANSITION CONNECTIONS

DFD35 dampers may be supplied with Round, Oval, and Rectangular duct connections.

Style	Description
B	Units Under 6″ (152) Tall
R	Round Non-Sealed (Low Pressure)
CR	Round Sealed (Medium Pressure)
WR	Round Welded (High Pressure)
C	Rectangular Sealed (Low and Medium Pressure)
WC	Rectangular Welded (High Pressure)
LO	Oval Non-Sealed (Low Pressure)
CO	Oval Sealed (Medium Pressure)
WO	Oval Welded (High Pressure)

The square damper size will be 2″ (51) larger in width and height than the round, oval, or rectangular duct size ordered.

MINIMUM and MAXIMUM SIZES

Round Transitions
Minimum 6″ (152) diameter
Maximum DFD35 – 94″ (2388) diameter

Rectangular and Oval Transitions
Minimum 6″w x 4″h (152 x 102) diameter
Maximum DFD35 – 118″w x 94″ (2997 x 2388)

'B' Style Transitions
Minimum height 4″ (102) 'B' style transitions are utilized on units where the damper height is less than 6″ (152).

Consult Ruskin for other available styles and sizes.

Note: For medium pressure units (Styles CR, C, and CO) the collar extends 1 1/2″ (38) beyond the sleeve length and for low pressure and high pressure units (Styles R, WR, WC, and LO) the collar extends 2 1/2″ (64) beyond the sleeve length.

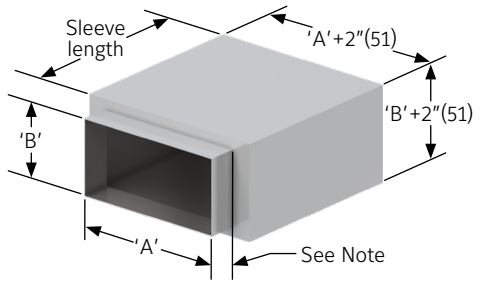

Style C and WC

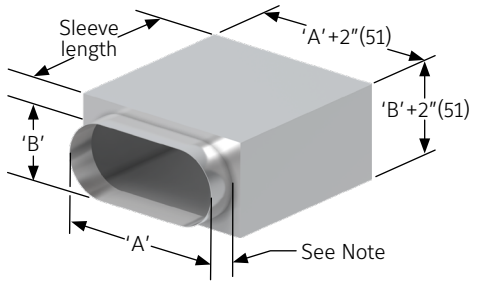

Style LO, CO and WO

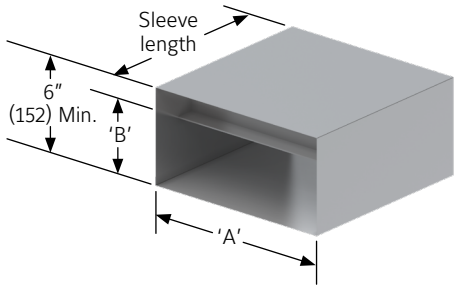

Style B

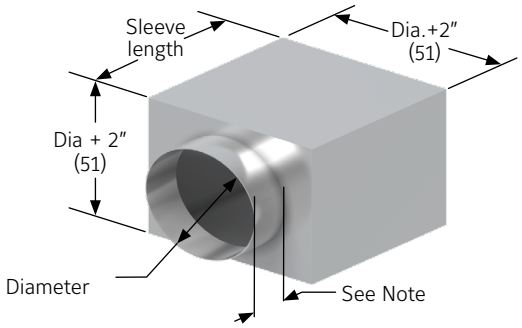

Style R, CR and WR

DFD35 LEAKAGE TO ATMOSPHERE / DUCT LEAKAGE TO ATMOSPHERE

When Ruskin's Fire Dampers are supplied with a factory installed damper sleeve, the sealed sleeve meets the lowest duct leakage requirements set forth by SMACNA. See Details Below.

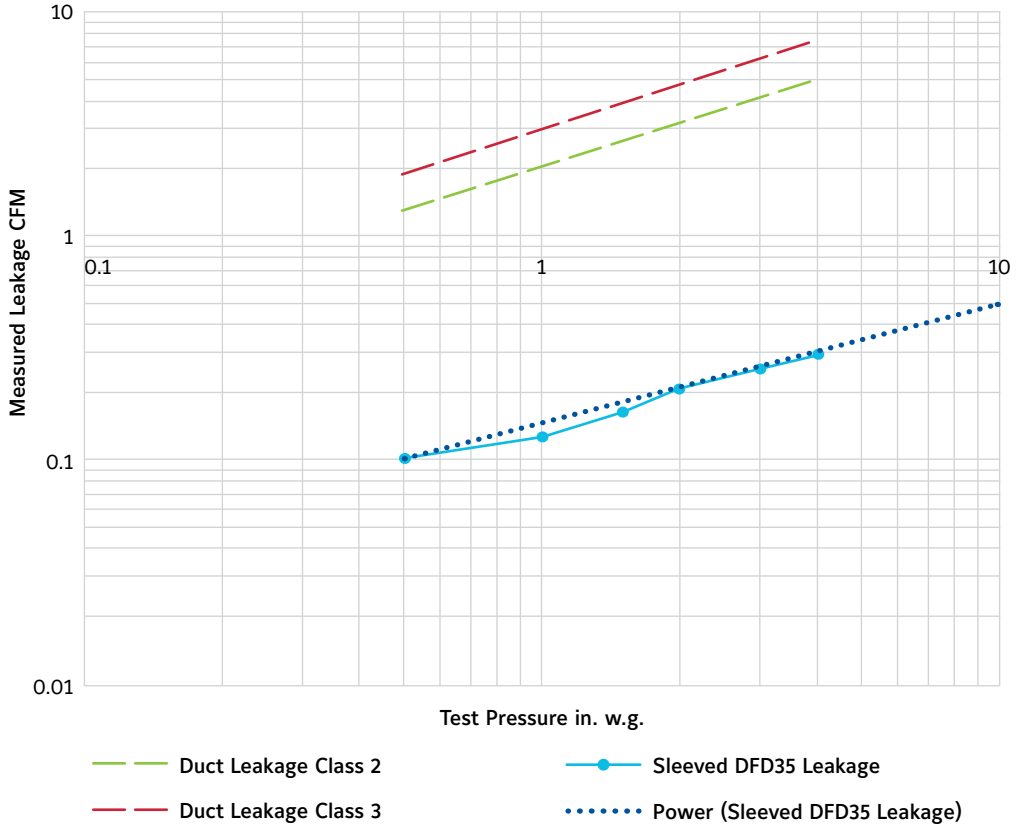

SUGGESTED SPECIFICATION

Furnish and install at locations shown on plans or as described in schedules AMCA Certified fire dampers constructed and tested in accordance with UL Safety Standard 555 that meet or exceed the following specifications.

Damper frame, where size permits, shall be constructed using UniFrame Design Concept (UDC) and shall be a minimum of 16 gauge (1.52) galvanized steel formed into a structural hat channel superior to 13 gauge (2.3) channel frame. Top and bottom frame members on dampers less than 13" (330) high shall be low profile design to maximize the free area of these smaller dampers. Damper blades shall be single skin 16 gauge (1.52) galvanized steel with three longitudinal grooves for reinforcement. Bearings shall be stainless steel sleeve turning in an extruded hole in the frame for maximum life. Fire Damper shall be produced in an ISO9001 certified factory.

Each fire damper shall have a 1 1/2 hour fire protection rating and shall be supplied with a 165°F (74°C) or 212°F (100°C) fusible link. Fire dampers shall be approved for vertical or horizontal mounting as required by the location shown and shall be installed using steel sleeves, angles, and other materials and practice required to provide an installation in accordance with the damper manufacturer's installation instructions. Submittal information shall include the fire protection, maximum velocity and pressure ratings, and the manufacturer's UL installation instructions. In addition, the fire dampers shall be AMCA licensed for air performance and shall bear the AMCA Certified Ratings Seal.

Each fire damper shall be labeled for use in dynamic systems. Static only damper labels are not permissible. The damper shall be rated for dynamic closure at 2000 fpm (10.2 m/s) and 4" w.g. (1 kPa) static pressure and shall be tested and rated to close with airflow in either direction.

Dynamic fire dampers shall be Ruskin multiple model DFD35.

(Consult www.ruskin.com for electronic version of this "Quick" spec as well as for complete 3-part CSI MasterFormat Specifications)

LINKS TO IMPORTANT DOCUMENTS

Document Title
Limited Warranty Document

RUSKIN® AUTHORITY IN AIR CONTROL

3900 Doctor Greaves Road
Grandview, MO 64030
Website: www.ruskin.com
Phone: (816) 761-7476